INSTALLATION & ADJUSTMENT GUIDE

# EA4 Vertical Split Platform Knuckle Joint Adjustment

Gate synchronising procedure | Issue 1, November 2026

## About this guide

This guide shows you how to set the knuckle joints on an EA4 vertical split platform lift so that both gates open and close together and lie flat when the platform is on the ground.

### When to use it

- When fitting a new EA4 lift. The lift is shipped with the knuckle joints only loosely fitted at the gate end, so this setting is always needed at installation.
- When the gates no longer sit flat, or one gate opens or closes before the other.
- After replacing any part of the knuckle joint assembly.

### Who should do it

A trained installer or service engineer. If you are unsure at any point, stop and contact PLS Technical Support.

### Safety first

- Park on firm, level ground with the handbrake on and the engine off.
- Keep people clear of the lift while it is moving.
- While the knuckle joints are loose, **the gates are not secured**. Lower the lift slowly and watch the gates at all times.
- Never stand on or load the platform until the procedure is finished and the lock nuts are tight.

## What you'll need

- Spanners to suit the M10 nuts and the M10 hex head set screw
- Hex (Allen) keys to suit the M10 countersunk socket screw and the platform adjuster grub screws
- A tape measure
- A second person to watch the gates while the lift is lowered (recommended)

Check that the knuckle joint assembly on **each** side of the lift is complete before you start. The full parts list is on page 4.

## Know the parts

There are two adjustment points on each side of the lift. You'll use both.

| Adjustment point | Where it is | What it does |
|---|---|---|
| **Platform adjuster block** | Lower end of the lift arm, near the platform pivot (Figure 3, view B) | Turning the grub screws tilts the platform forwards or backwards to suit the vehicle. Only works while the knuckle joints are loose. |
| **Knuckle joint** | Between the lift arm and each gate (Figure 3, views A, C and D) | Works like a turnbuckle: a centre adjuster stud with a left-hand rod end at one end and a right-hand rod end at the other. Turning it lengthens or shortens the joint, which sets the gate position. |

**WIND IN**
Shortens the joint: gate moves towards
**closed**

**WIND OUT**
Lengthens the joint: gate moves towards
**open**

A **lock nut** stops the joint turning on its own and stops the assembly coming apart. Loosen it to adjust and tighten it afterwards.

**Gate alignment marks:** when the platform is fully lowered, a locking pin on one gate (**A1**) should line up exactly with a receiving boss on the other gate (**A2**). This is your main check that the two gates are synchronised.

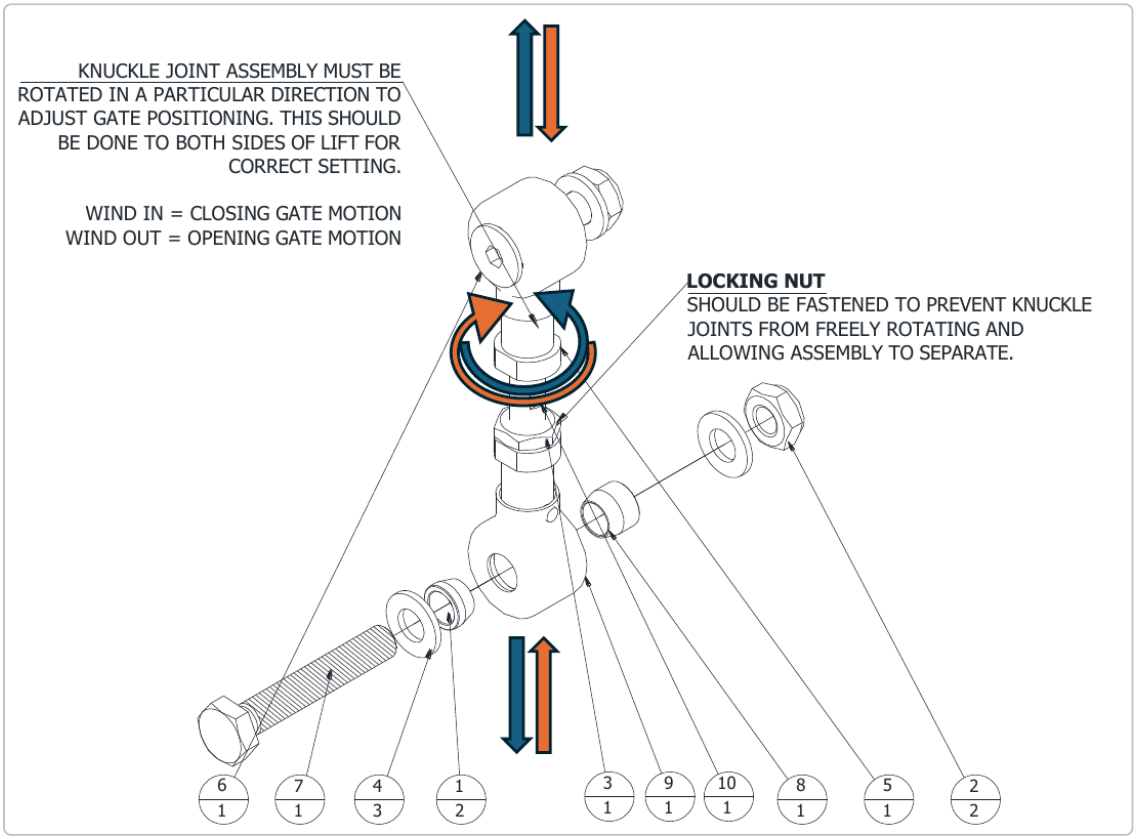


**Figure 1:** Knuckle joint assembly. Item numbers match the parts list. Arrows show the wind in / wind out directions.

## Step-by-step procedure

Work through the steps in order. Adjust **both sides** of the lift; the gates will not sit correctly if only one side is set.

### Stage 1: Fit and lower the lift

1. Fit the lift to the vehicle in its **stowed** (folded up) position. Leave the knuckle joints loosely fitted at the gate end, as supplied.
2. Lower the lift slowly to the ground. Because the knuckle joints are loose, the gates are not secured: watch them all the way down and stop if they snag or swing.

### Stage 2: Set the platform angle

3. With the knuckle joints still loose, use the grub screws on the platform adjuster block to tilt the platform forwards or backwards until it suits the vehicle's floor height and approach.
4. Repeat on the other side so the platform sits evenly.

### Stage 3: Set the knuckle joints (lift on the ground)

5. Loosen the lock nut on the knuckle joint.
6. Turn the knuckle joint to move the gate: **wind in** to move it towards closed, **wind out** to move it towards open.
7. Adjust until both gates lie **visibly flat** on the ground with no weight on them, and locking pin **A1** lines up exactly with receiving boss **A2**.
8. Repeat steps 5 to 7 on the other side, then recheck the first side.

### Stage 4: Lock and secure

9. Tighten the knuckle joint fixings fully in this ground position.
10. Tighten the lock nuts on both sides so the joints cannot turn or separate.

### Stage 5: Test

11. Raise the lift part way (about 45°) and check that the two gates close evenly towards each other. The reference drawing shows a gap of about 75 mm between the gate edges at this point.
12. Run the lift through a full cycle (stow, deploy, raise and lower) and carry out the final checks below.

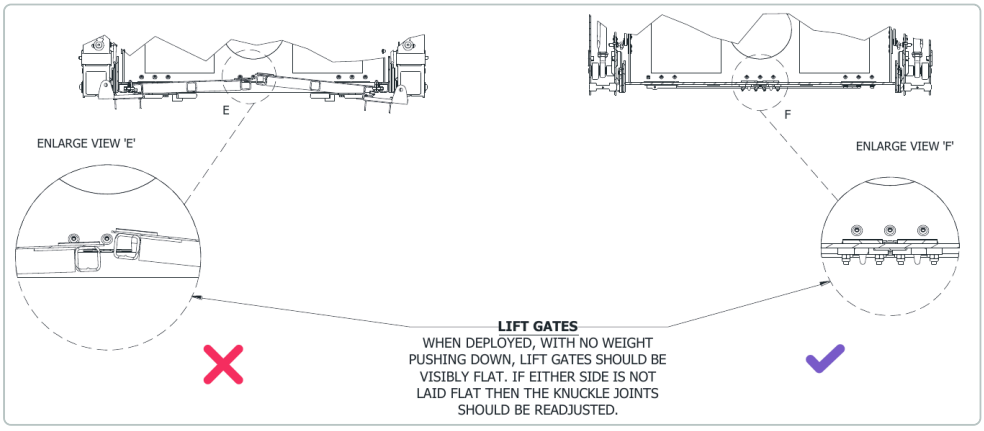


**Figure 2:** Gate position check. Left: gate not lying flat, so the knuckle joint needs adjusting. Right: gate lying flat, correctly set.

## Final checks

Before handing the vehicle back, confirm every item below.

- [ ] Both gates lie visibly flat when deployed, with no weight on them
- [ ] Locking pin A1 lines up exactly with receiving boss A2 when fully lowered
- [ ] Gates close evenly towards each other as the lift rises
- [ ] Lock nuts are tight on both knuckle joints
- [ ] The lift completes a full cycle smoothly

## Troubleshooting

| What you see | Likely cause | What to do |
|---|---|---|
| One gate does not lie flat on the ground | Knuckle joint on that side needs adjusting | Loosen the lock nut and wind in or out until the gate is flat, then re-lock |
| Gates close at different rates, or A1 and A2 don't line up | The two sides are set differently | Adjust each side in turn until the pin and boss align, then recheck |
| Platform tilts forwards or backwards | Platform adjuster block not set for this vehicle | Loosen the knuckle joints, reset the grub screws, then repeat Stages 3 to 5 |
| Knuckle joint turns on its own or works loose | Lock nut not tight | Reset the gate position and tighten the lock nut |

## Parts list

Parts for one knuckle joint assembly. Item numbers match Figure 1. Quote the part number when ordering spares from PLS.

| Item | Qty | Part number | Description |
|---|---|---|---|
| 1 | 2 | EAFABARMEA659 | EA Rod End Spacer 7.5 mm |
| 2 | 2 | FAS80009 | M10 Metal Lock Nut, Thin |
| 3 | 1 | FASNT/1003 | M10 Half Nut |
| 4 | 3 | FASWA/1001 | M10 Plain Washer, Form A |
| 5 | 1 | ROSJ10MMF-LH | Rod End M10 x 1.5 Female, Left-Hand |
| 6 | 1 | FASBL/1024 | M10 x 45 Socket Head Countersunk Screw |
| 7 | 1 | FASBL/1029 | M10 x 60 Hex Head Set Screw |
| 8 | 1 | EAFABARMEA691 | EA Rod End Spacer 11 mm |
| 9 | 1 | ROSJ10MMF-RH | Rod End M10 x 1.5 Female, Right-Hand |
| 10 | 1 | EAFABARMEA699 | EA Adjuster Stud M10 |

**Need help?** Contact PLS Technical Support with the lift serial number and photos of both knuckle joints. Passenger Lift Solutions, Unit 2 Summit Crescent Industrial Estate, Smethwick, B66 1BT | www.passengerliftsolutions.com

## Reference drawing

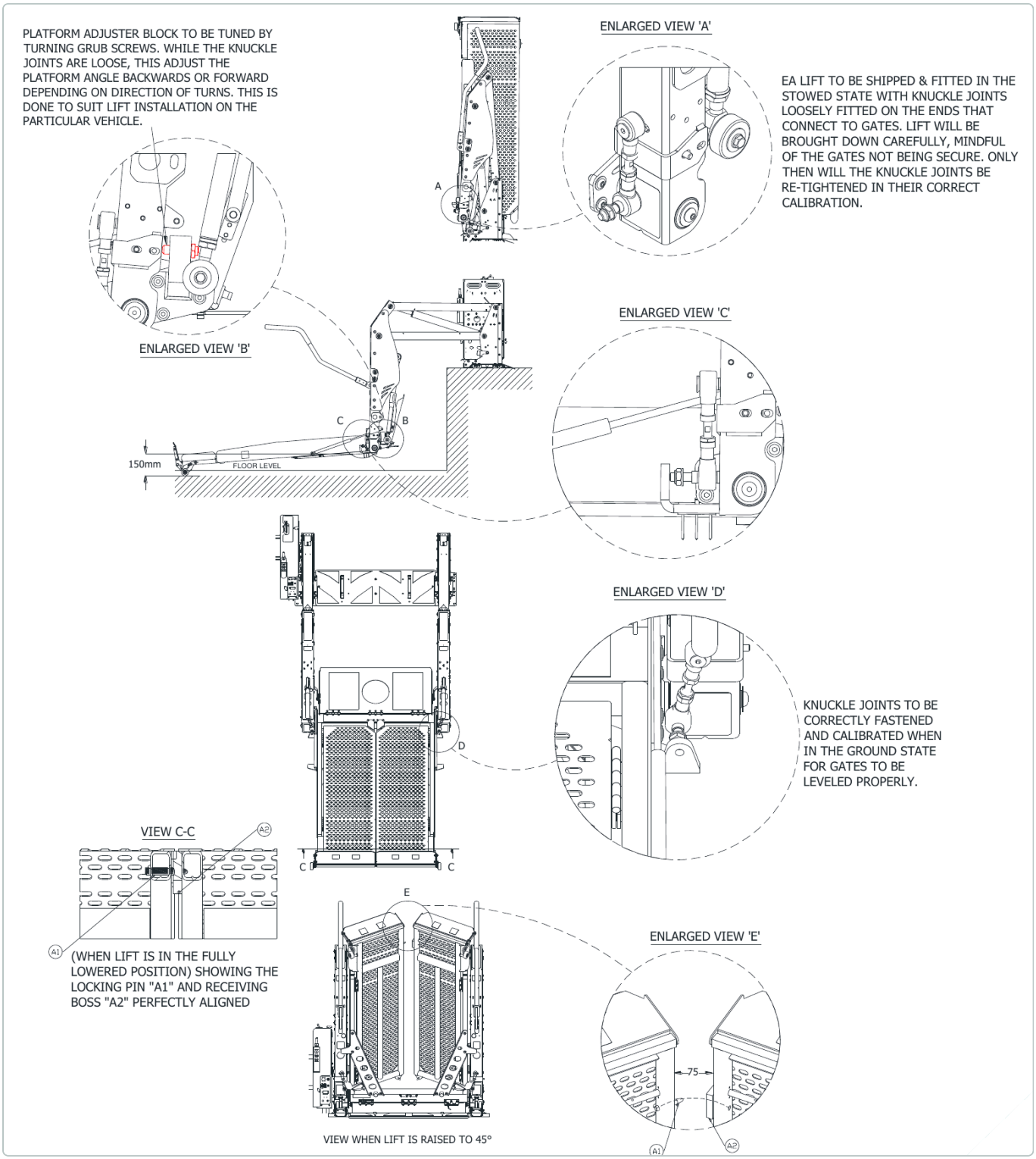


**Figure 3:** Adjustment points. View A: knuckle joint at the gate. View B: platform adjuster block. Views C and D: knuckle joint with the lift lowered. View C-C: locking pin A1 and receiving boss A2 aligned. View E: gates at 45°.